LEGEND
HLS = HIGH LEVEL SWITCH
LLS = LOW LEVEL SWITCH
HHLS = HIGH-HIGH LEVEL SWITCH
FM = FLOWMETER

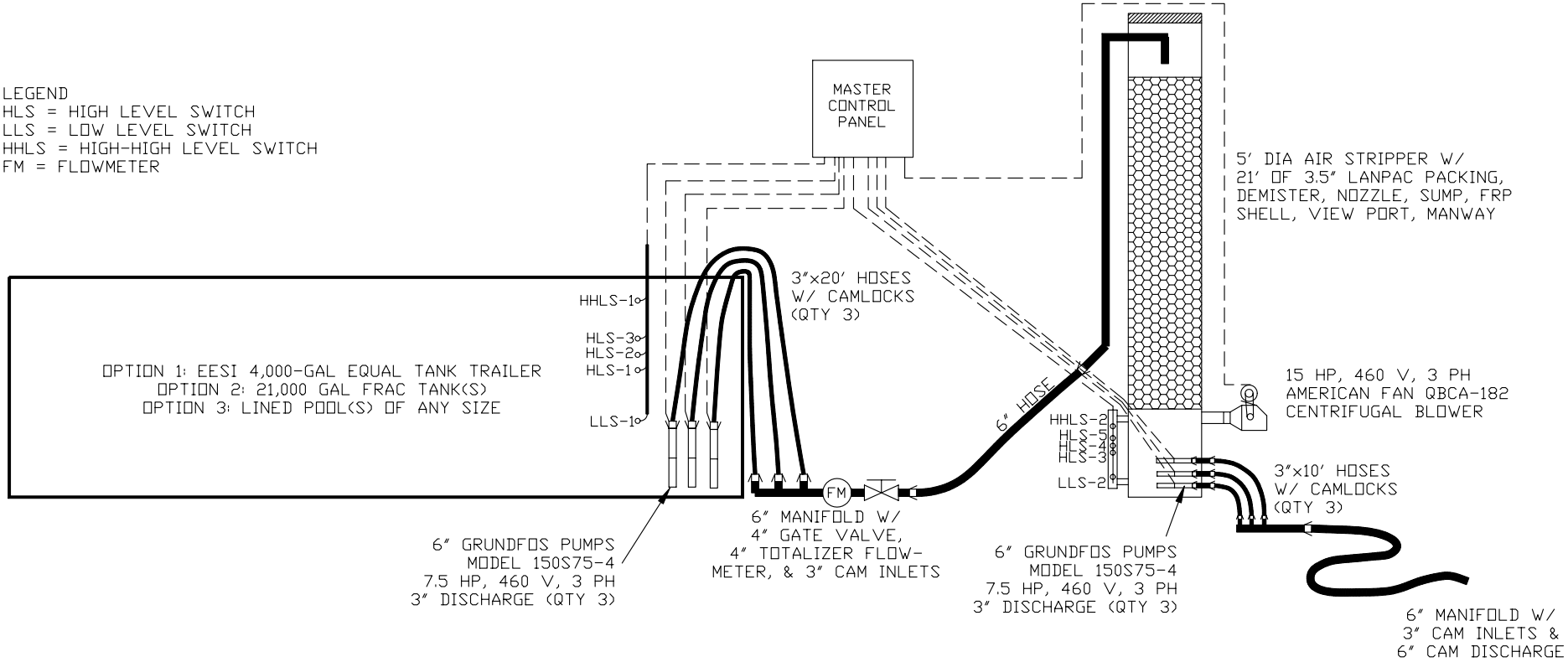

GENERAL NOTES:
1. SYSTEM INCLUDE INF & EFF SAMPLE PORTS.
2. AIR STRIPPER, CONTROL PANEL, BLOWER, & SUMP PUMPS ARE ALL INCLUDED ON TRAILER MOUNTED PACKAGED SYSTEM.

FIELD CONNECTIONS
1. INF PIPE OR HOSE TO EQUAL. TANK BY OTHERS.
2. POWER CONNECTION-460V/3PH/100AMPS.
3. TREATED WATER DISCHARGE PIPING MAY OR MAY NOT BE INCLUDED DEPENDING ON DISTANCE TO DISCHARGE POINT.
4. SECONDARY TREATMENT EQUIPMENT, IF REQUIRED, CONNECTIONS BY OTHERS.

OPTIONS:
1. TRAILER MOUNTED GENERATOR POWER.
2. DISCHARGE BAG FILTERS.
3. DISCHARGE CARBON VESSELS.
4. MODIFICATIONS TO CONTROL PANEL TO INCORPORATE ADDITIONAL EQUIPMENT OR CONTROLS.

ELECTRICAL:
1. ALL EQUIPMENT PRE-WIRED TO MASTER CONTROL PANEL.
2. MOTORS ARE 3-PHASE 460 VAC; CONTROL POWER IS 120-VOLT.
3. CONTROL HAS MAIN DISCONNECT ON/OFF.

LOAD CALCS:

INF PUMP 1 (7.5HP/460V/3PH)	11 AMPS
INF PUMP 2 (7.5HP/460V/3PH)	11 AMPS
INF PUMP 3 (7.5HP/460V/3PH)	11 AMPS
EFF PUMP 1 (7.5HP/460V/3PH)	11 AMPS
EFF PUMP 2 (7.5HP/460V/3PH)	11 AMPS
EFF PUMP 3 (7.5HP/460V/3PH)	11 AMPS
BLOWER (15HP/460V/3PH)	21 AMPS
FULL LOAD AMPS, ALL MOTORS	87 AMPS

MINIMUM REQD. GENERATOR SIZE IS 100kW 3-PHASE W/ 460 VOLT OUTPUT. EESI CAN PROVIDE GENERATOR W/ POWER CABLE & MOBILE 250-GAL MOBILE TEMP. FUEL TANK AS OPTION.

CONTROL PANEL LOGIC
1. HAND-OFF-AUTO SWITCHES FOR ALL 7 MOTORS.
2. HLS-1, HLS-2, & HLS-3 ACTIVATE INF PUMPS 1,2,&3, RESPECTIVELY.
3. LLS-1 DEACTIVATES ALL 3 INFLUENT PUMPS.
4. HHLS-1 ILLUMINATES RED FLASHING LIGHT ON TOP OF PANEL.
5. HLS-3, HLS-4, & HLS-5 ACTIVATE EFF PUMPS 4,5,&6, RESPECTIVELY.
6. LLS-2 DEACTIVATES ALL 3 EFFLUENT PUMPS.
7. HHLS-2 DEACTIVATES ALL 3 INFLUENT PUMPS & ILLUMINATES FLASHING RED LIGHT ON TOP OF PANEL.
8. MANUAL RESET REQUIRED FOR BOTH HIGH-HIGH CONDITIONS TO DE-ILLUMINATE RED FLASHING LIGHT ON TOP OF PANEL.
9. ALL MOTORS HAVE CIRCUIT BREAKER AND THERMAL OVERLOAD PROTECTION.
10. MAIN DISCONNECT DE-ENERGIZES ENTIRE SYSTEM.

DRAWING 1

EESI 500 GPM MOBILE TREATMENT SYSTEM P&ID

ENGINEERED ENVIRONMENTAL SOLUTIONS INC.
601 N EAST COAST AVE, LANTANA, FL 33462
561-721-0062 PHONE / 561-721-0127 FAX

JOSEPH ZIEGLER, P.E.
PE NO. 49375
601 N EAST COAST AVE
LANTANA, FL 33462
561-721-0062
P.E. SEAL

SCALE:	N.T.S.
DATE:	5-15-06
DRAWN BY:	JNZ
CHECKED BY:	JNZ
APPROVED BY:	JNZ

No.	REVISIONS	BY	DATE

NOTES:
1. TRAILER WIDTH IS 8-FT
2. TRAILER REQUIRES A SPACE 38-FT X 20-FT REQD. FOR GUY WIRES.
3. MAX TOWER HEIGHT IS 32-FT
4. TRAILER IS PRE-PIPED, PRE-WIRED (NOT SHOWN FOR CLARITY).
5. REFER TO P&ID FOR ADDL. DETAILS.
6. 15,000 GAL POOL DIMENSIONS ARE 27-FT DIA X 4-FT HIGH.

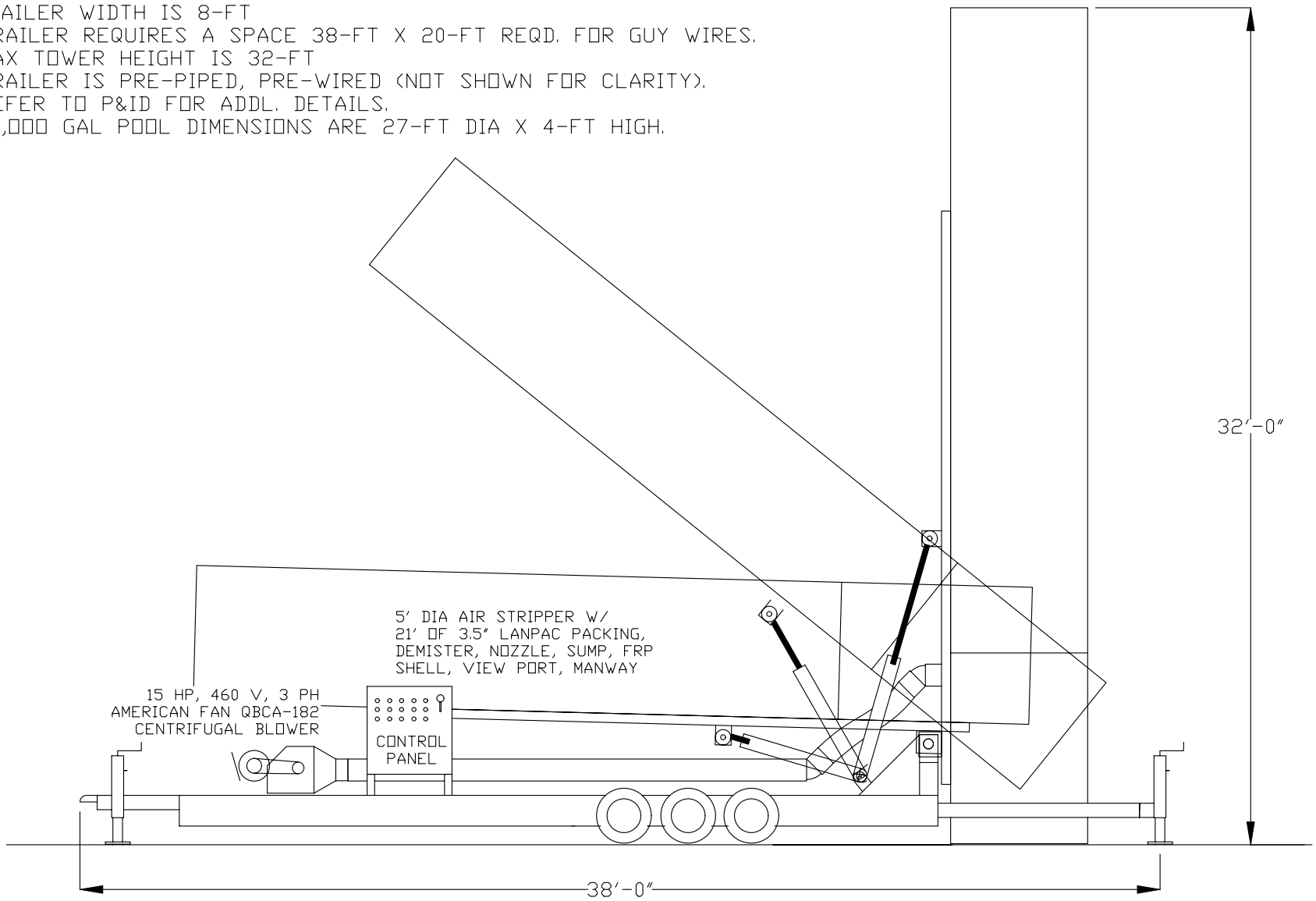

DRAWING	EESI 500 GPM MOBILE TREATMENT SYSTEM TRAILER	ENGINEERED ENVIRONMENTAL SOLUTIONS INC. 601 N EAST COAST AVE, LANTANA, FL 33462 561-721-0062 PHONE / 561-721-0127 FAX	JOSEPH ZIEGLER, P.E. PE NO. 49375 601 N EAST COAST AVE LANTANA, FL 33462 561-721-0062 P.E. SEAL	SCALE: N.T.S. DATE: 5-15-06 DRAWN BY: JNZ CHECKED BY: JNZ APPROVED BY: JNZ
2				

No.	REVISIONS	BY	DATE

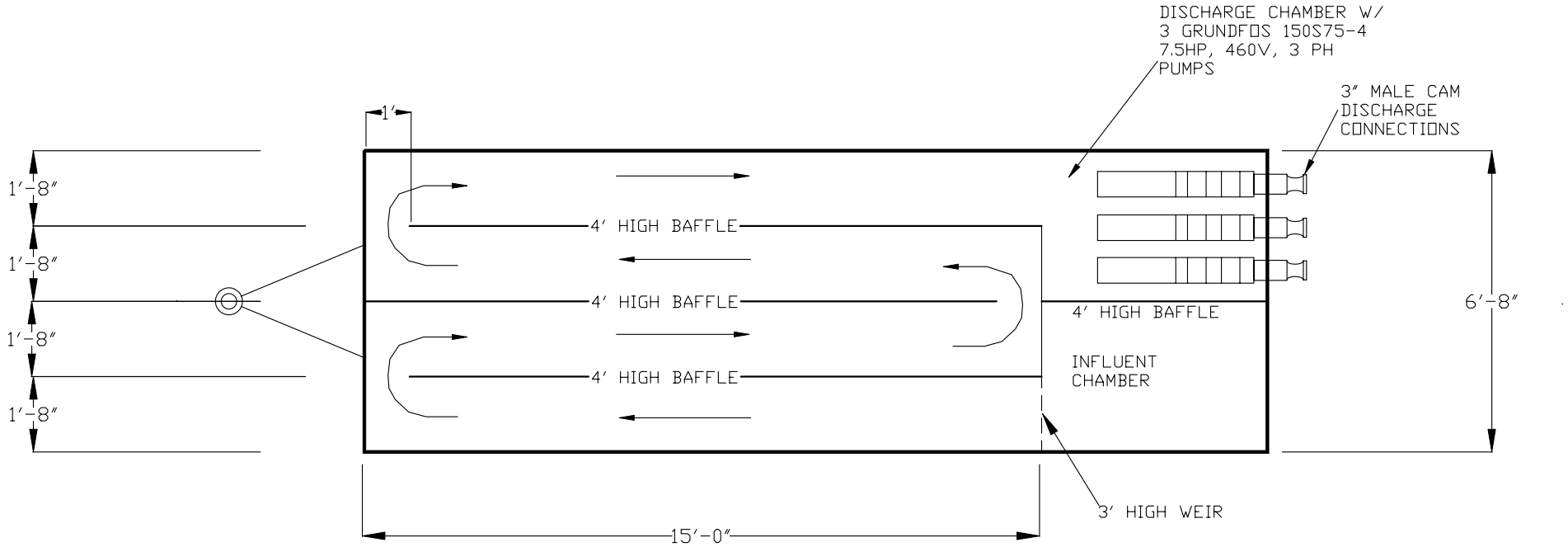

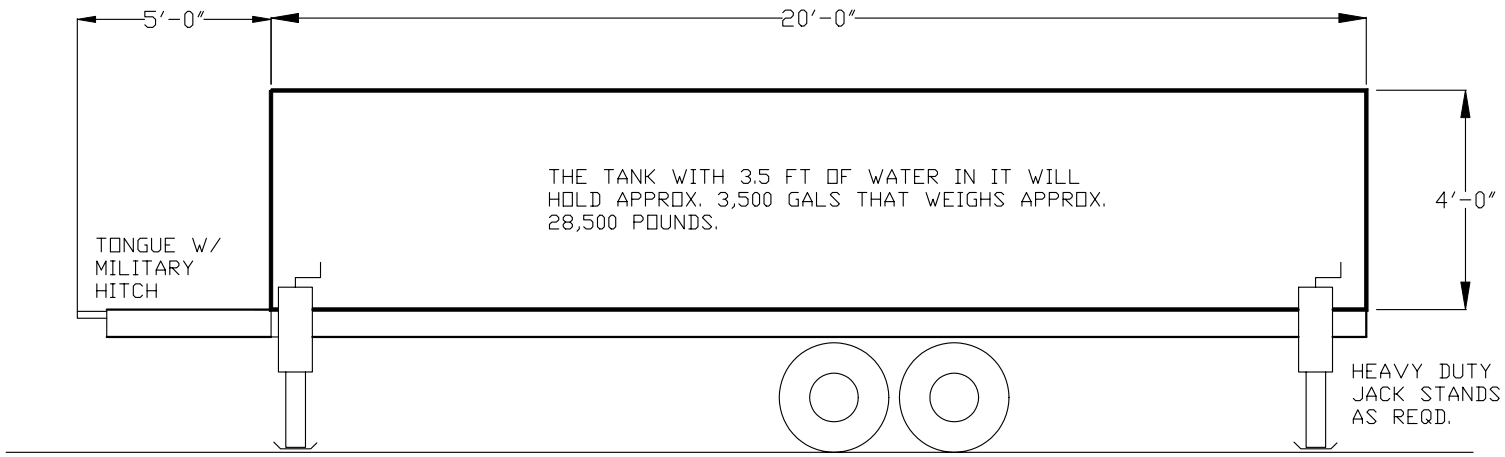

DRAWING	EESI MOBILE EQUALIZATION TANK TRAILER
3	

ENGINEERED ENVIRONMENTAL SOLUTIONS INC.
601 N EAST COAST AVE, LANTANA, FL 33462
561-721-0062 PHONE / 561-721-0127 FAX

JOSEPH ZIEGLER, P.E.
PE NO. 49375
601 N EAST COAST AVE
LANTANA, FL 33462
561-721-0062
P.E. SEAL

SCALE:	N.T.S.
DATE:	5-15-06
DRAWN BY:	JNZ
CHECKED BY:	JNZ
APPROVED BY:	JNZ

No.	REVISIONS	BY	DATE

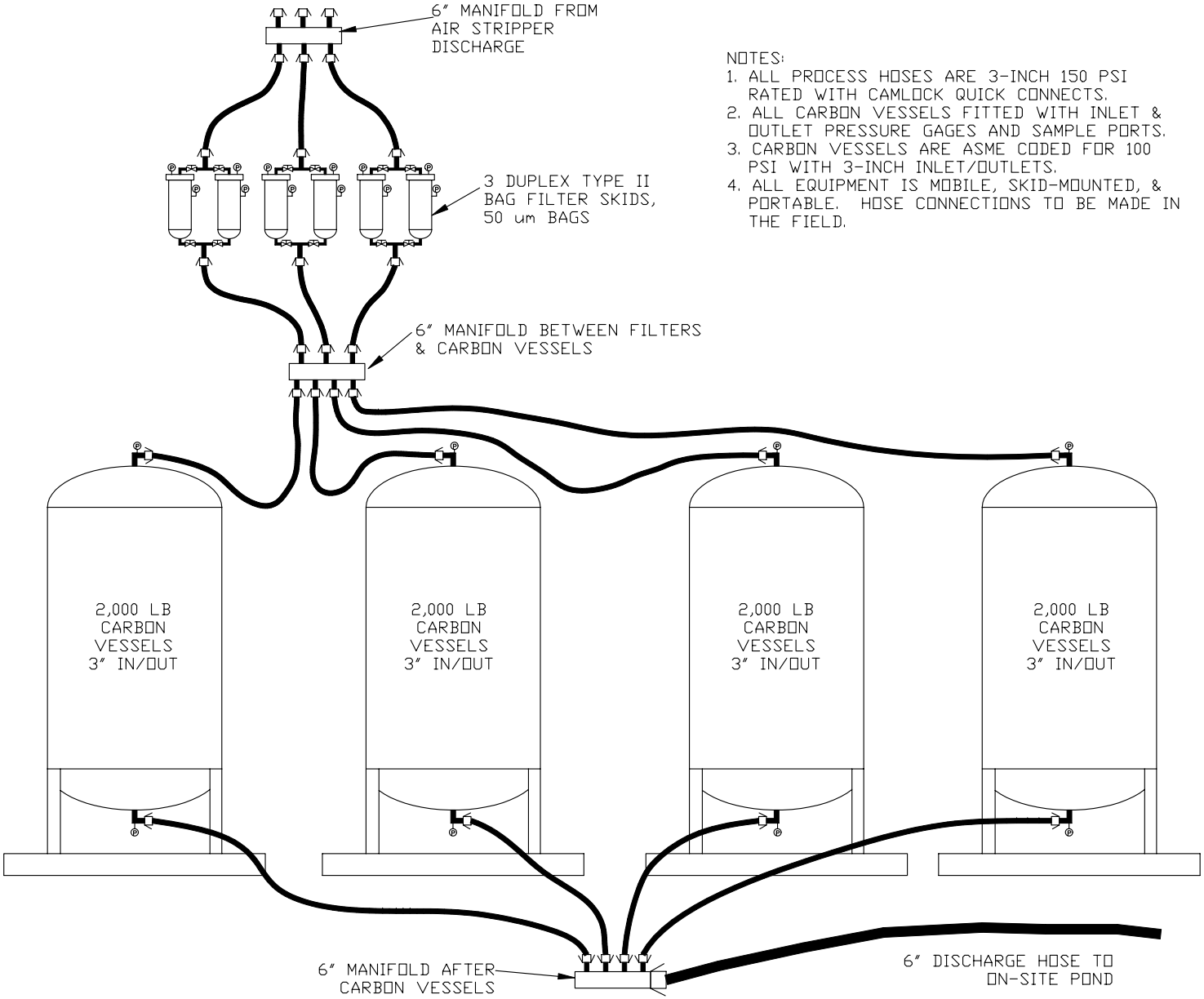

NOTES:

1. ALL PROCESS HOSES ARE 3-INCH 150 PSI RATED WITH CAMLOCK QUICK CONNECTS.
2. ALL CARBON VESSELS FITTED WITH INLET & OUTLET PRESSURE GAGES AND SAMPLE PORTS.
3. CARBON VESSELS ARE ASME CODED FOR 100 PSI WITH 3-INCH INLET/OUTLETS.
4. ALL EQUIPMENT IS MOBILE, SKID-MOUNTED, & PORTABLE. HOSE CONNECTIONS TO BE MADE IN THE FIELD.

DRAWING	EESI OPTIONAL SECONDARY TREATMENT FILTERS & CARBON SYSTEM	ENGINEERED ENVIRONMENTAL SOLUTIONS INC.	JOSEPH ZIEGLER, P.E. PE NO. 49375 601 N EAST COAST AVE LANTANA, FL 33462 561-721-0062 P.E. SEAL	SCALE: N.T.S. DATE: 5-15-06 DRAWN BY: JNZ CHECKED BY: JNZ APPROVED BY: JNZ
4		601 N EAST COAST AVE, LANTANA, FL 33462 561-721-0062 PHONE / 561-721-0127 FAX		

No.	REVISIONS	BY	DATE